INSTRUCTION SHEET
CARBONATION TESTER ASSEMBLY
AND PARTS LISTING, PN 54-0007/01

NOTE

If needed, also see Lancer Instruction Sheet 28-0379/01, Instructions for Calibrating the Lancer Carbonation Tester, Kit PN 82-2449.

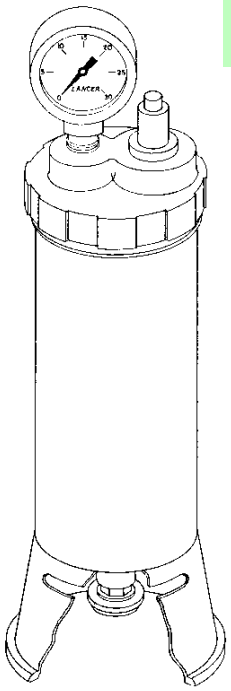

*Please refer to the Lancer web site (***www.lancercorp.com***) for information relating to Lancer Installation and Service Manuals, Instruction Sheets, Technical Bulletins, Service Bulletins, etc.*

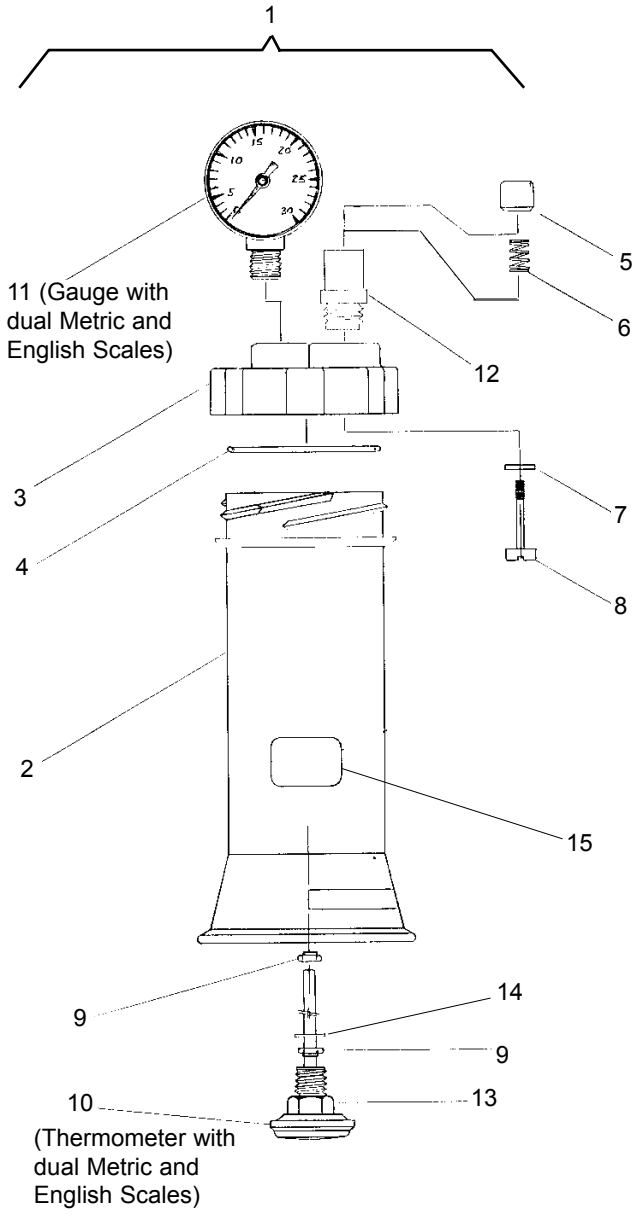

ITEM	PART NO.	DESCRIPTION
1	54-0007/01	Carbonation Tester
2	05-0111	Cup, Carbonation Tester
3	05-0112/01	Cap, Carbonation Tester
4	02-0281	O-Ring
5	01-0768	Vent Valve, Cap
6	03-0001	Spring
7	02-0108	Seal
8	01-0767	Vent Valve Stem
9	02-0067	O-Ring, Seal
10	22-0025	Thermometer
11	16-0022	Gauge
12	01-0814	Vent Housing
13	01-1013	Adaptor
14	04-0250	Washer
15	06-0200	Decal, Instructions (on Tube)
-	90-0173	Tube, Packing
-	90-0174	Cap (for Tube)
-	90-0175	Pad (for Cap, Tube)
-	06-0199	Decal, Temperature and Pressure (on Tester)

LANCER **6655 LANCER BLVD. • SAN ANTONIO, TEXAS 78219 USA • (210) 310-7000**

FAX SALES

• NORTH AMERICA – 210-310-7245 • INTERNATIONAL SALES – 210-310-7242 • CUSTOMER SERVICE – 210-310-7242 •
• LATIN AMERICA – 210-310-7245 • EUROPE – 32-2-755-2399 • PACIFIC – 61-8-8268-1978 •

FAX ENGINEERING: • 210-310-7096

"Lancer" is the registered trademark of Lancer • Copyright — 2001 by Lancer, all rights reserved.

DATE: 09/26/01
P.N.: 28-0330/02